# MS-MP

## MSE/00-0K

**Photo.M18,IR emiss.,M12 plug 90°,Emitter**

**M18 DECOUT® DC OUTPUT**

# OVERVIEW

- Wide range of models: diffuse, retro-reflective, polarized, through-beam detec□tion and background suppression
- Through-beam models with high sensing range
- Retro-reflective models with red visible polarized light
- Models with right angle optic (MP)
- Background suppression models with fixed distance
- Check function available for all through-beam models
- Complete protection against electrical damage

# TECHNICAL FEATURES

Detection properties

| | |
|---|---|
| Nominal sensing distance | 16m (MSR), 32m (MSD) |
| Thermal drift of Sr | ≤10% Sr |
| Repeat Accuracy | 5% |
| Sensitivity adjustment | No |

## Application

| | |
|---|---|
| Function Principle | Emitter |
| Emitter/Receiver | Emitter |
| Optic position | Axial |

## Outputs

| | |
|---|---|
| Output type | |
| Output Function | |

## Electrical data

| | |
|---|---|
| Operating Voltage | 10…30VDC |
| No-Load supply current | ≤ 15mA |
| Max ripple content | ≤10% |
| LED indicators | Red (powerON) |
| Time delay before availability | ≤200ms |
| Short-circuit protection | Short circuit (autoreset), Overvoltage |
| Emission | LED Infrared (880nm) |
| Interference to external light | 3000lux (incandescent lamp), 10000lux (sunlight) |
| Impulsive Overvoltage Protection | Impulsive Overvoltage Protection |

## Mechanical data

| | |
|---|---|
| Dimensions | M18 x 1 /L =78,6mm |

| | |
|---|---|
| Housing material | PBT / PC plug |
| Weight | 30g |
| Connections | M12 plug 90° |
| Active Head Material | PMMA |
| Tightening torque | 1Nm |
| Operating temperature | 25°C..+ 70° C (Without freeze) |
| Diameter/Dimension | M18 |

Test/Approvals

| | |
|---|---|
| Approvals | CE cURus |
| EMC compatibility | EN 60947-5-2 |
| Shocks and vibrations | Vibration IEC 60068-2-6 / Shock IEC 60068-2-27 |
| Degree of protection | IP67 |

Accessories

| | |
|---|---|
| Supplied Accessories | nuts M18 x 1 |

Generical Data

| | |
|---|---|
| Dimensions | M18 x 1 /L =78,6mm |
| Operating Temperature | - 25°C…+ 70°C (Without freeze) |
| Mechanical Protection | IP67 |

# CONNECTIONS

Eletrical diagram

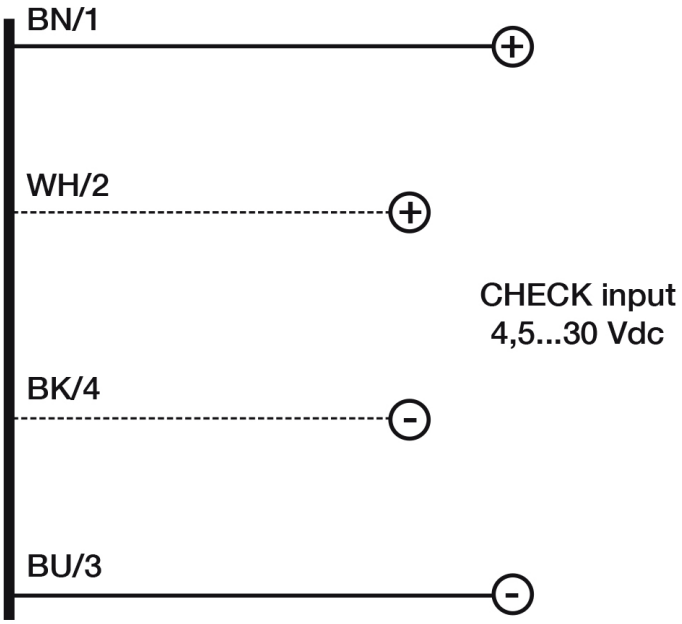


Connector

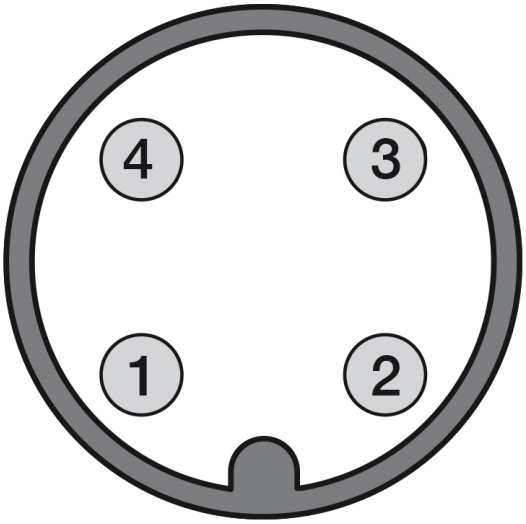


# OTHERS

Dimensions

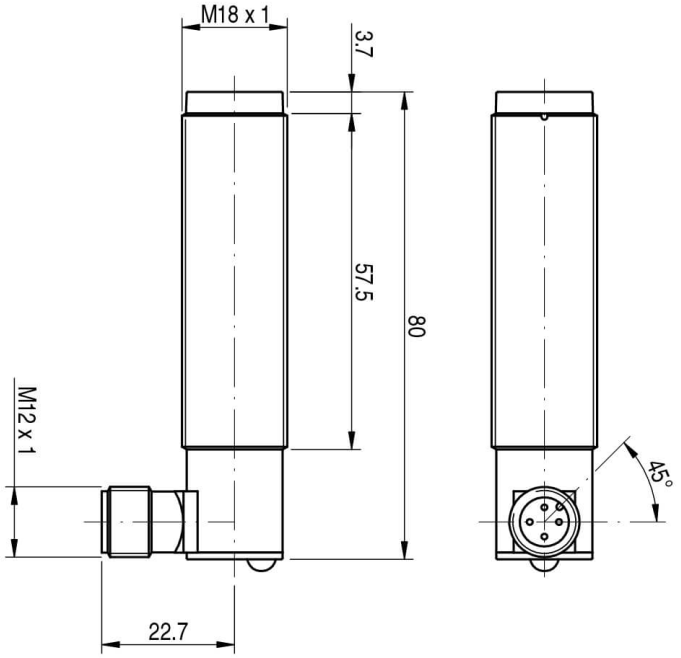


Response curves

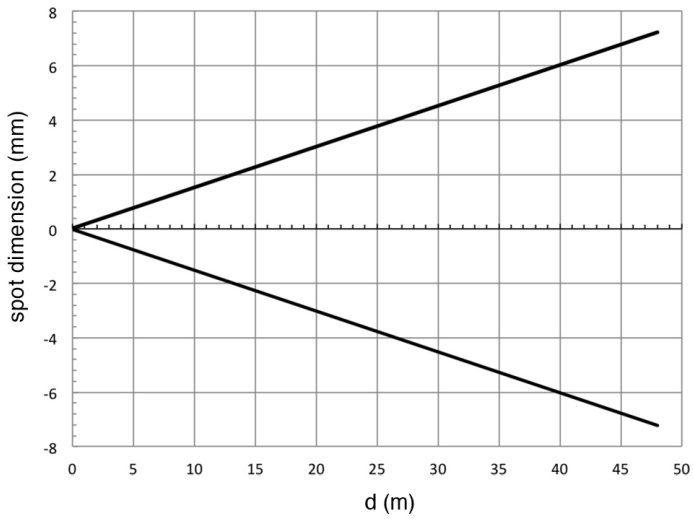


**Datasensing S.r.l.**
Strada S.Caterina, 235
41122 Modena (MO)
Tel. 059 420411
Fax 059 253973
E-mail
info@datasensing.com

**date of printing**
25/10/2026
03:43:10