Q50

Q50IH/00-0E

Photo.50x50,Relay-NO+NC,M12 plug,Diff.

COMPACT CUBIC 50 X 50 MM UNIVERSAL PHOTOELECTRIC SENSOR

OVERVIEW

- Universal photoelectric sensor, excellent performances and high versatility due to the wide choice of different versions available
- Cable output or revolving connector, NPN/PNP outputs for Vdc models or SPDT relay output for multi -voltage Vdc / Vac models
- Complementary outputs NO + NC available on the Vdc models or selectable output NO/NC available on the multi-voltage Vdc/Vac models
- Totally protected against electrical damages
- Wide choice of optical functions available: Diffuse: 2 m; background suppression: 500 mm; polarized: 6m; through beam: 20 m. Dual multifunction output state LEDs

TECHNICAL FEATURES

Detection properties

Nominal sensing distance	20m
Sensitivity adjustment	Trimmer

Application

Function Principle	Emitter
Optic position	Axial

Outputs

Output type	Emitter
Output Function	Emitter

Electrical data

Operating Voltage	10…30VDC
No-Load supply current	≤ 50mA
Max ripple content	≤10%
LED indicators	Green (powerON)
Time delay before availability	≤200ms
Short-circuit protection	Yes
Reverse Polarity Protection	Yes
Emission	LED Infrared (850nm)

Mechanical data

Dimensions	50X50mm
Material	PC/ABS
Housing material	PC/ABS
Weight	105g
Connections	M12 plug

Active Head Material	PMMA
Operating temperature	- 20°C…+ 60°C (UL omologation 0°C…60°C)
Diameter/Dimension	Cubic

Test/Approvals

EMC compatibility	EN 60947-5-2
Shocks and vibrations	Vibration IEC 60068-2-6 / Shock IEC 60068-2-60
Degree of protection	IP67

Accessories

Supplied Accessories	Mounting bracket

Generical Data

Dimensions	50x50x17mm
Operating Temperature	- 20°C…+ 60°C (Without freeze)
Mechanical Protection	IP67

CONNECTIONS

Eletrical diagram

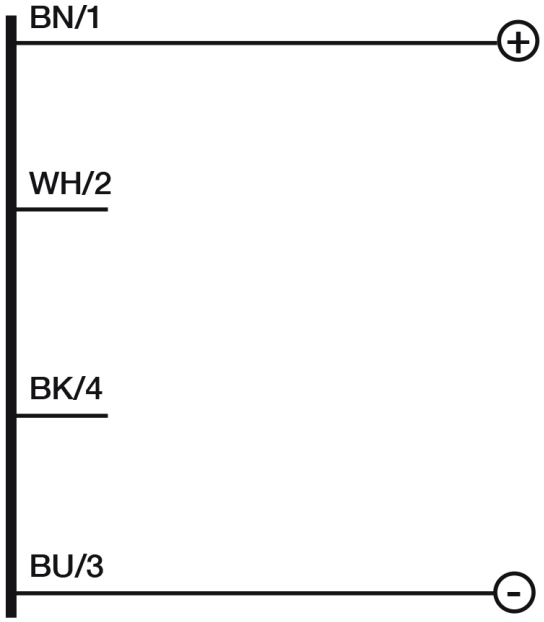

Connector

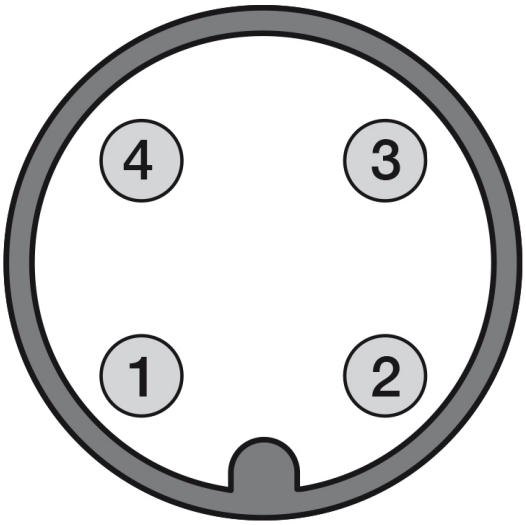

OTHERS

Dimensions

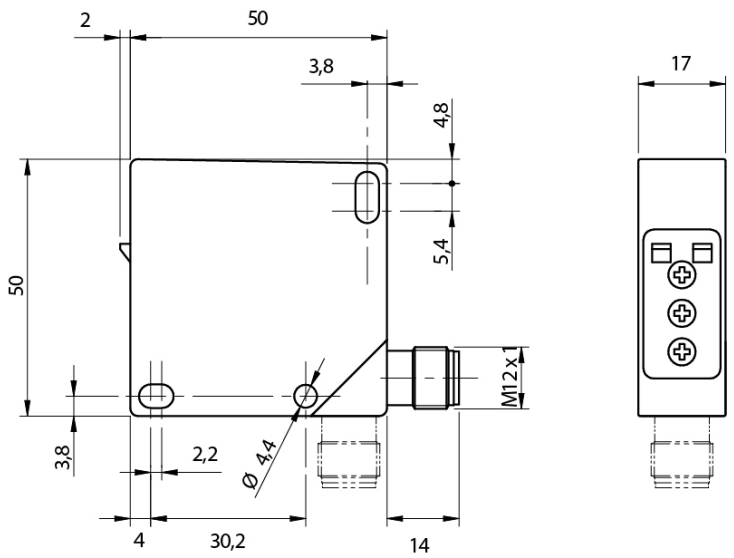

Response curves

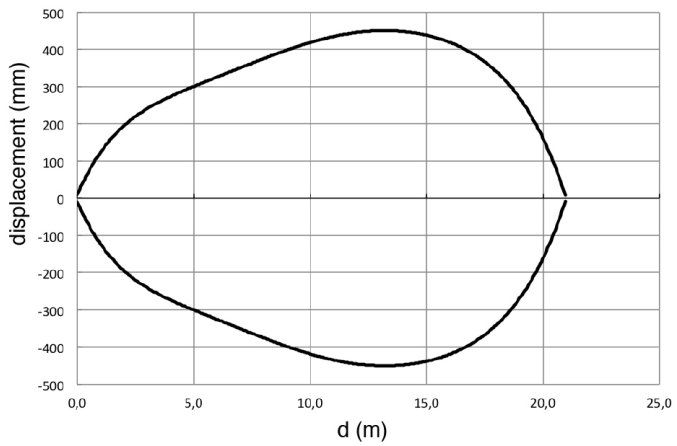

Datasensing S.r.l.
Strada S.Caterina, 235
41122 Modena (MO)
Tel. 059 420411
Fax 059 253973
E-mail
info@datasensing.com

date of printing
25/10/2026
03:51:59