BS-BV

BVC/00-0E

Photo.Midi,AC-NO/NC,M12 plug,Reflex

CUBIC PHOTOELECTRIC SENSORS DECOUT® OUTPUT - DC OR AC

OVERVIEW

- Wide range of models: diffuse, retro-reflective, polarized
- Muntifunctional DECOUT® output and logic connection possibilities (DC types)
- Multivoltage 20-253 Vac and TRIAC output with NO/NC selectable (AC types)
- Sensitivity adjustment
- Standard cable exit or M12 plug exit
- LED status indicator
- Completely filled with resin
- High sensing range

TECHNICAL FEATURES

Detection properties

Nominal sensing distance	8m
Repeat Accuracy	≤ 10%
Sensitivity adjustment	Trimmer

Application

Function Principle	Retro-reflective

Optic position	Axial

Outputs

Output type	TRIAC NO/NC
Output Function	NO/NC
Switching frequency	25Hz
Response time	20ms

Electrical data

Operating Voltage	20...253VAC/50-60Hz
No-Load supply current	1,5W
Load current	5…300mARMS
Leakage current	1,5m ARMS max (supply V=253Vac)
Output voltage drop	≤2,5V@Iload=300mARMS
LED indicators	Red (output status)
Time delay before availability	200ms
Short-circuit protection	Yes
Reverse Polarity Protection	Yes
Emission	LED Infrared (880nm)
Interference to external light	3000lux Incandescent Lamp, 10000lux

Mechanical data

Dimensions	16x37x64
Material	
Housing material	ABS
Weight	185g
Connections	M12 plug 90°
Active Head Material	PMMA
Operating temperature	- 25°C…+ 70°C (without freeze)
Diameter/Dimension	Cubic

Test/Approvals

Approvals	CE
EMC compatibility	EN 60947-5-2
Shocks and vibrations	Vibration IEC 60068-2-6 / Shock IEC 60068-2-49
Degree of protection	IP65

Accessories

Supplied Accessories	ST01 mounting brakets and screws

Generical Data

Dimensions	16x37x64

Operating Temperature	- 25°C…+ 70°C (Without freeze)
Mechanical Protection	IP65

CONNECTIONS

Eletrical diagram

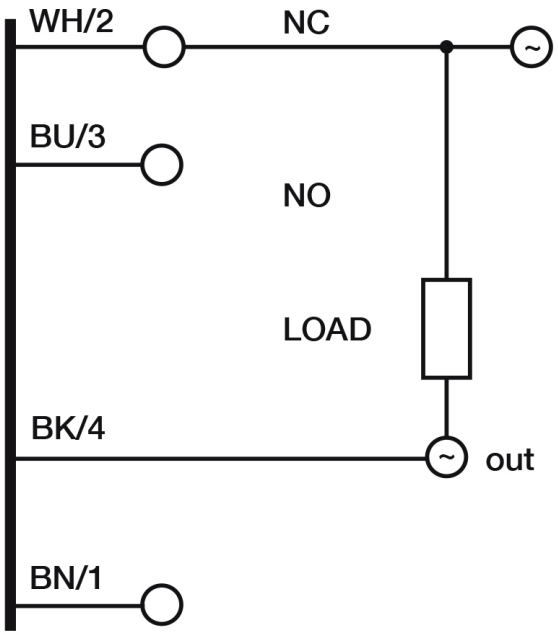

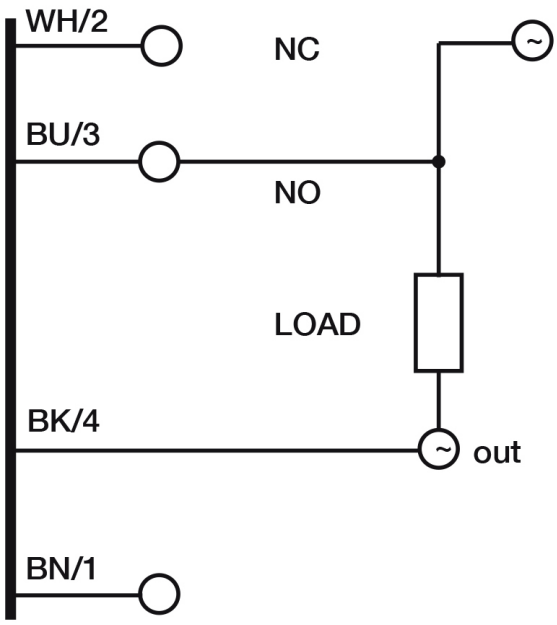

Connector

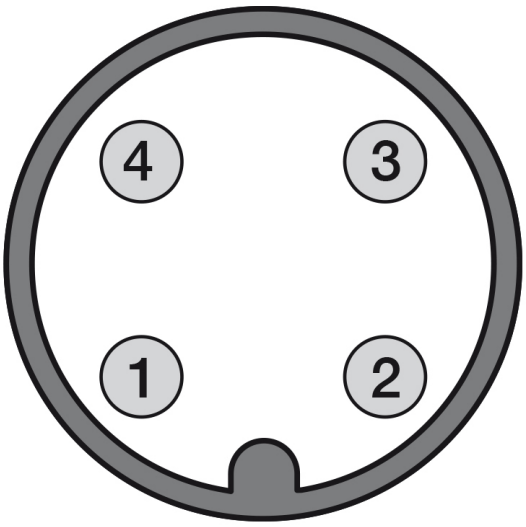

OTHERS

Dimensions

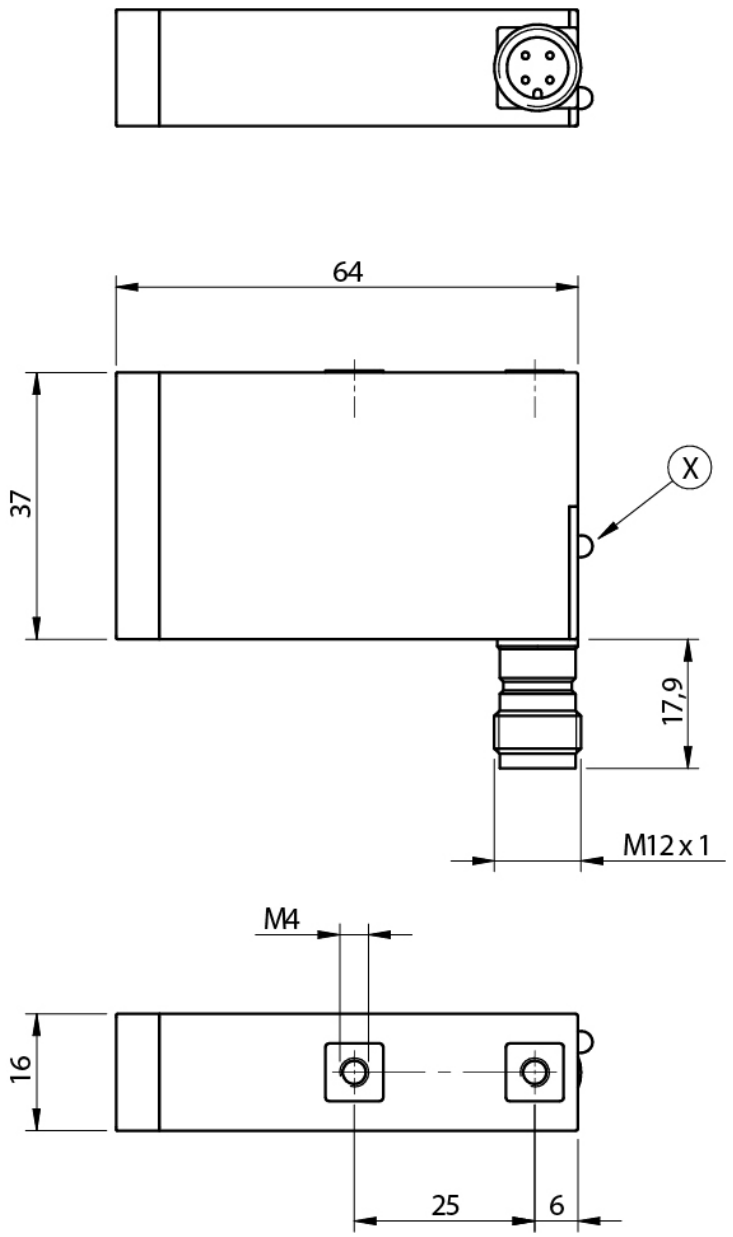

Response curves

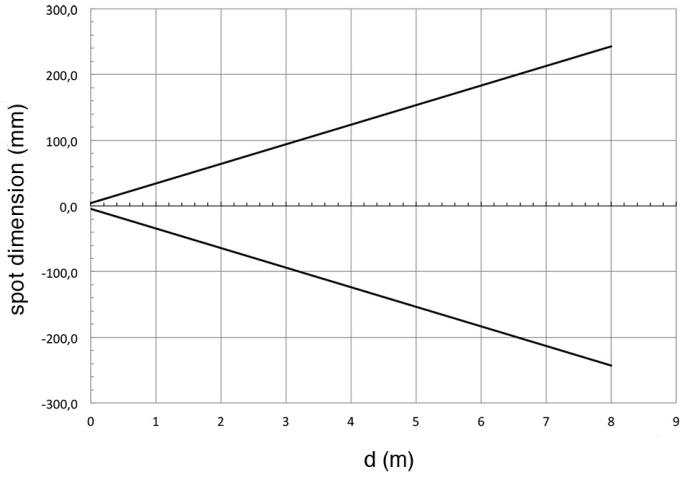

Datasensing S.r.l.
Strada S.Caterina, 235
41122 Modena (MO)
Tel. 059 420411
Fax 059 253973
E-mail
info@datasensing.com

date of printing
25/10/2026
03:46:31