# BS-BV

## BS4/00-0E

**Photo.Midi,NPN/PNP-NO/NC,M12 plug,Diff.**

**CUBIC PHOTOELECTRIC SENSORS DECOUT® OUTPUT - DC OR AC**

# OVERVIEW

- Wide range of models: diffuse, retro-reflective, polarized
- Muntifunctional DECOUT® output and logic connection possibilities (DC types)
- Multivoltage 20-253 Vac and TRIAC output with NO/NC selectable (AC types)
- Sensitivity adjustment
- Standard cable exit or M12 plug exit
- LED status indicator
- Completely filled with resin
- High sensing range

# TECHNICAL FEATURES

Detection properties

| | |
|---|---|
| Nominal sensing distance | 200mm |
| Repeat Accuracy | ≤ 5% |
| Sensitivity adjustment | Trimmer |

Application

| | |
|---|---|
| Function Principle | Diffuse reflection (short distance, ≤200mm) |

| | |
|---|---|
| Optic position | Axial |

Outputs

| | |
|---|---|
| Output type | Decout NPN/PNP Selectable NO/NC Selectable |
| Output Function | NO/NC Selectable |
| Switching frequency | 80Hz |
| Response time | 6,25ms |

Electrical data

| | |
|---|---|
| Operating Voltage | 10…30VDC |
| No-Load supply current | ≤ 25mA |
| Load current | ≤100mA |
| Leakage current | ≤ 10µA |
| Output voltage drop | ≤1,2V@Iload=100mA |
| Max ripple content | ≤10% |
| LED indicators | Red (output status) |
| Time delay before availability | 200ms |
| Short-circuit protection | Yes |
| Reverse Polarity Protection | Yes |
| Emission | LED Infrared (880nm) |

| | |
|---|---|
| Interference to external light | 3000lux Incandescent Lamp, 10000lux |

Mechanical data

| | |
|---|---|
| Dimensions | 16x37x64 |
| Material | |
| Housing material | ABS |
| Weight | 185g |
| Connections | M12 plug 90° |
| Active Head Material | PMMA |
| Operating temperature | - 25°C…+ 70°C ( without freeze) |
| Diameter/Dimension | Cubic |

Test/Approvals

| | |
|---|---|
| Approvals | CE |
| EMC compatibility | EN 60947-5-2 |
| Shocks and vibrations | Vibration IEC 60068-2-6 / Shock IEC 60068-2-32 |
| Degree of protection | IP65 |

Accessories

| | |
|---|---|
| Supplied Accessories | ST01 mounting brakets and screws |

Generical Data

| | |
|---|---|
| Dimensions | 16x37x64 |
| Operating Temperature | - 25°C…+ 70°C (Without freeze) |
| Mechanical Protection | IP65 |

# CONNECTIONS

Eletrical diagram

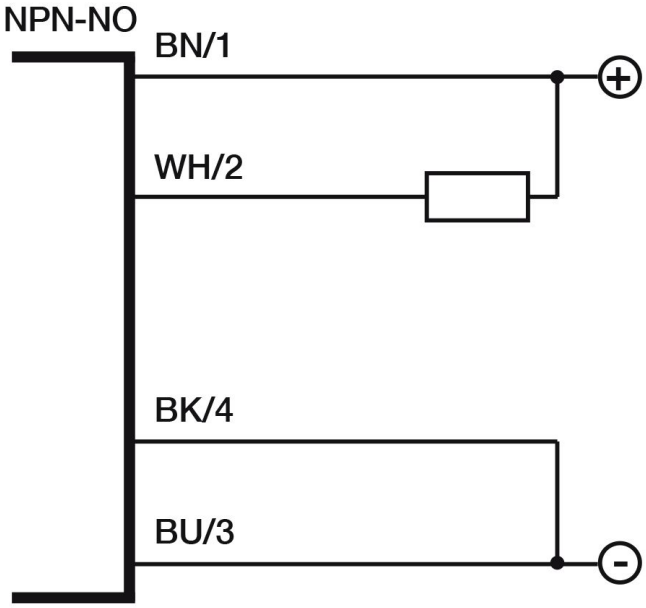


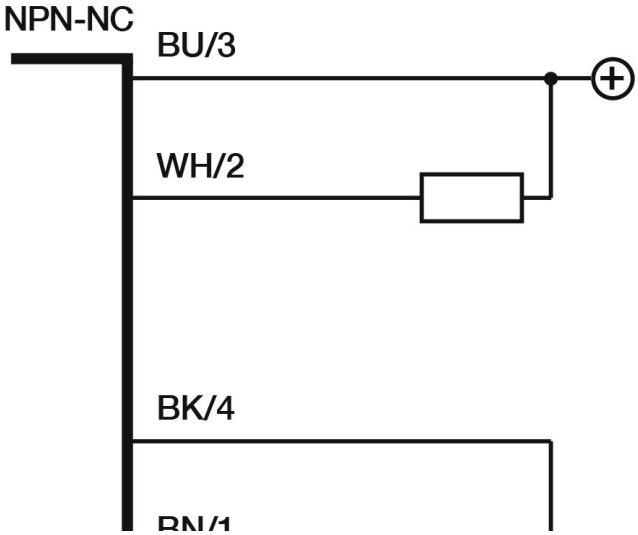

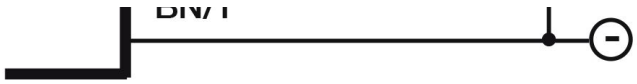


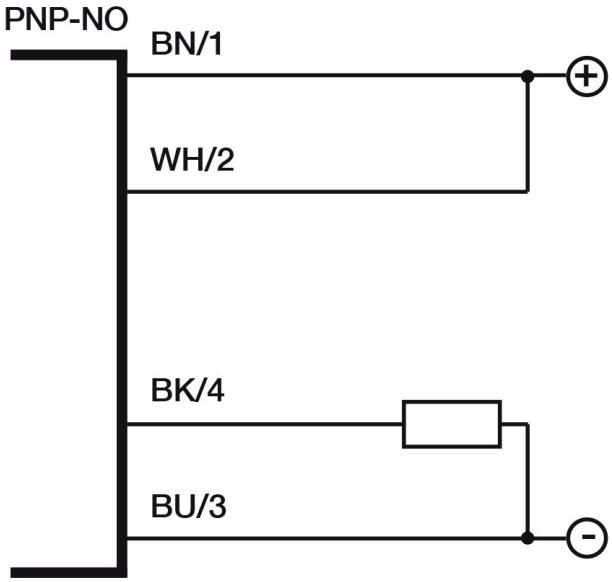


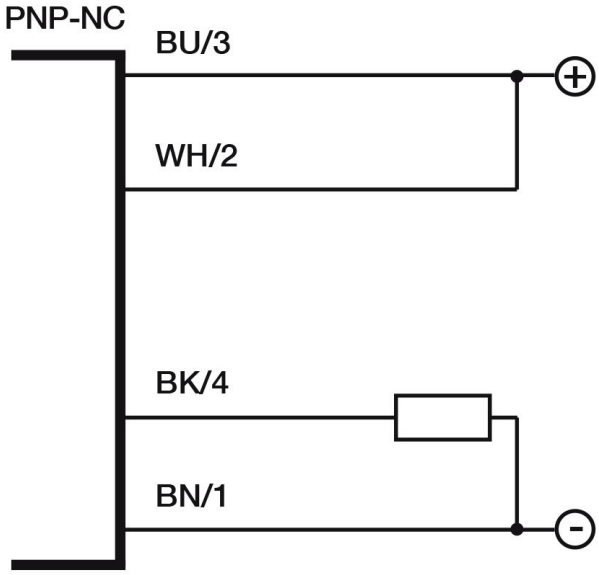


Connector

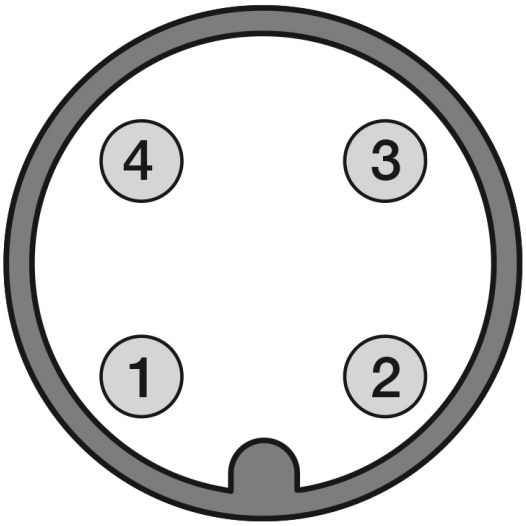


# OTHERS

Dimensions

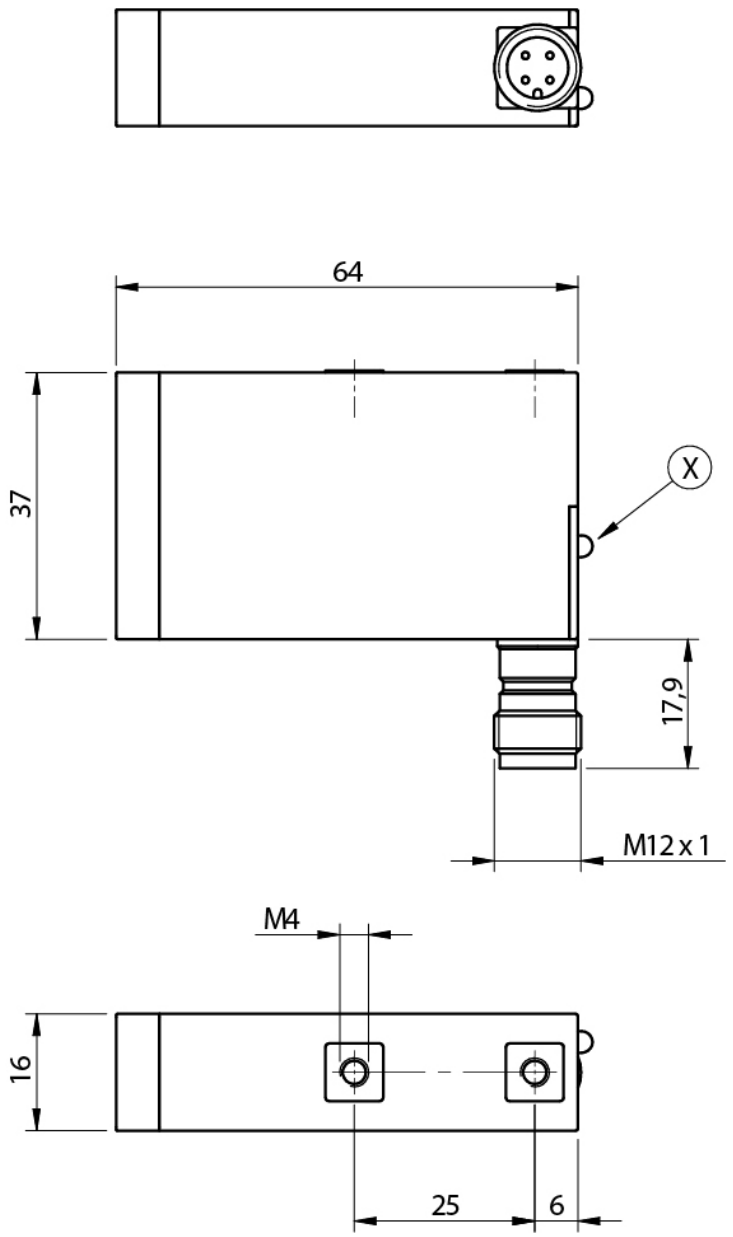


Response curves

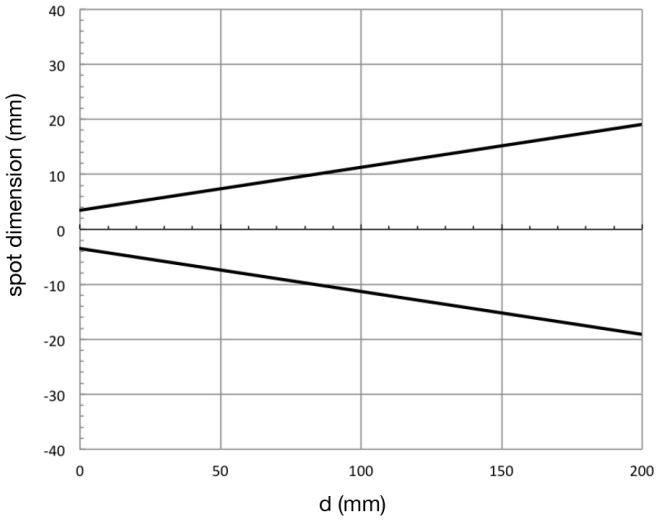


**Datasensing S.r.l.**
Strada S.Caterina, 235
41122 Modena (MO)
Tel. 059 420411
Fax 059 253973
E-mail
info@datasensing.com

**date of printing**
25/10/2026
03:46:20